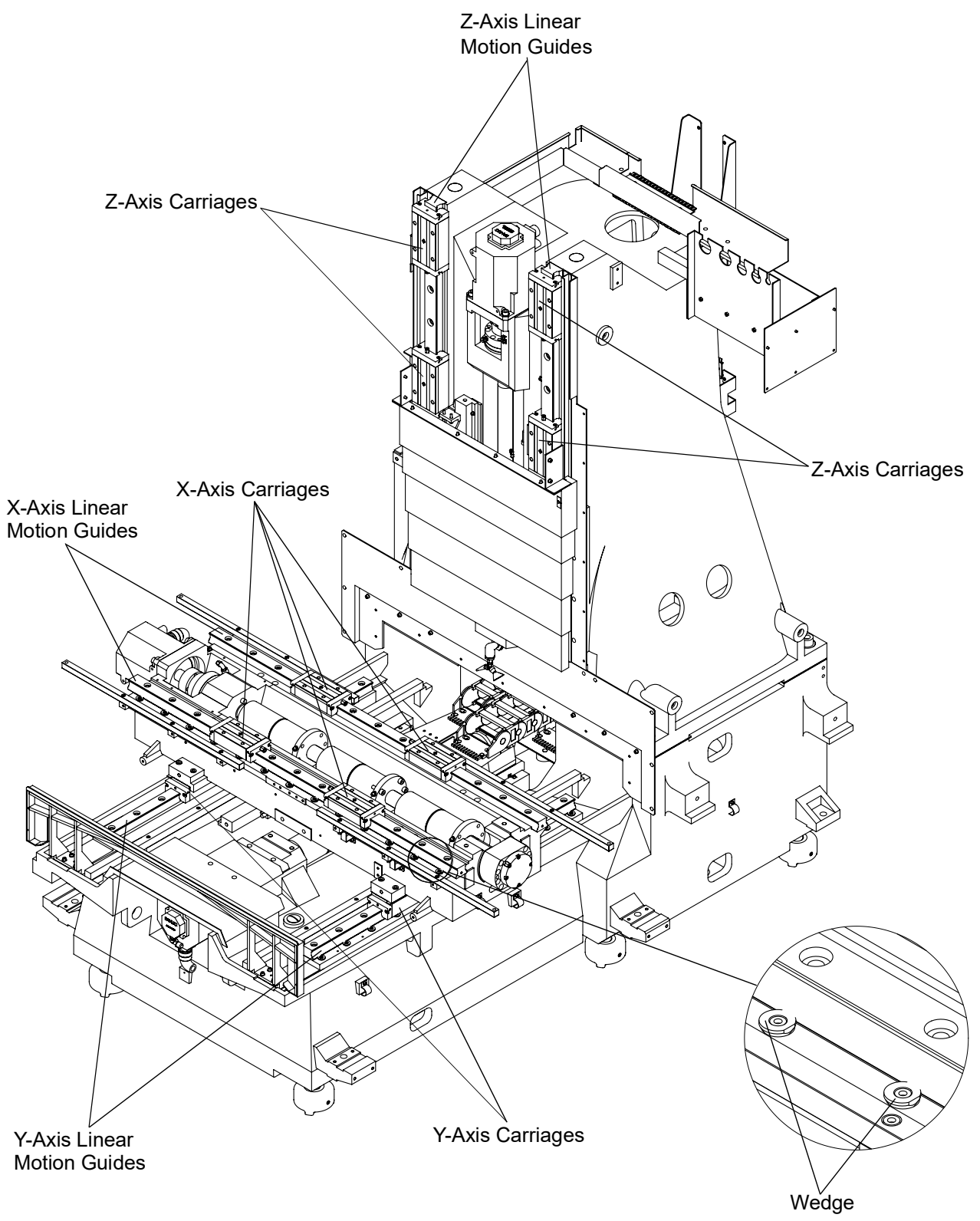
Z-Axis Linear
Motion Guides
Z-Axis Carriages
Z-Axis Carriages
X-Axis Carriages
X-Axis Linear
Motion Guides
Y-Axis Linear
Motion Guides
Y-Axis Carriages
Wedge